Borea

TABLES

Piero Lissoni

Description

The dining tables reflect the design and shades of the seating structures, but use steel instead of aluminum to support distinctive tops in glazed lava stone. The lava stone comes from the slopes of Mount Etna (Sicily, Italy) and is available in large rectangular tiles in three bright colours which harmonize perfectly with the whole collection. The glazed surface is made with a special material obtained by recycling the glass of discarded TV and PC monitors, applied directly to the stone through an exclusive manufacturing process. The tables are available in two sizes to accommodate six and eight people respectively.

Technical information

Frame
tubular stainless steel

Top
enamelled lava stone

Ferrules and spacers
plastic material

Waterproof cover cloth
PES fabric coated on one side in PU

Technical drawings

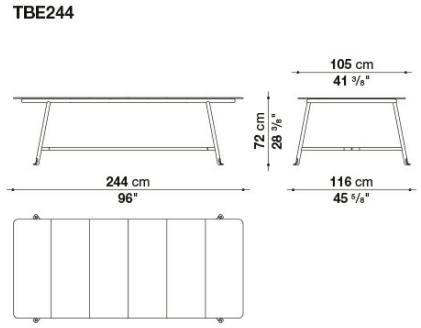

TBE244

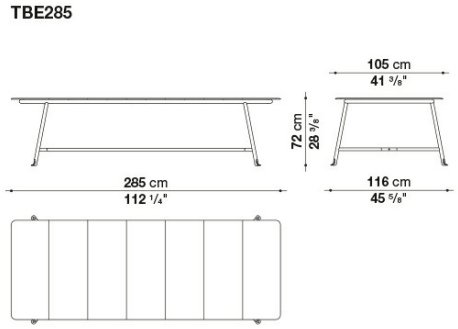

TBE285

B&B Italia reserves the right to make technological and aesthetic improvements to its models, including changes to the sizes and materials, without notice. The technical drawings do not define the details of the product. The measurements shown are indicative and may undergo changes. In particular, the dimensions relevant to the padded parts are subject to usage tolerances over time caused by the normal adjustment of the padding. For the specific information, please contact the dealer closest to you.